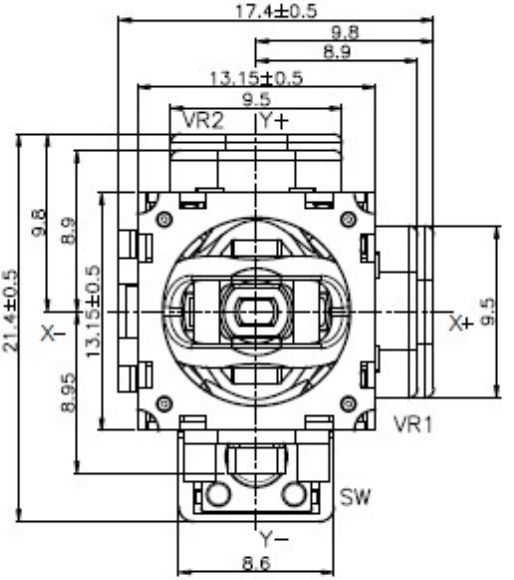

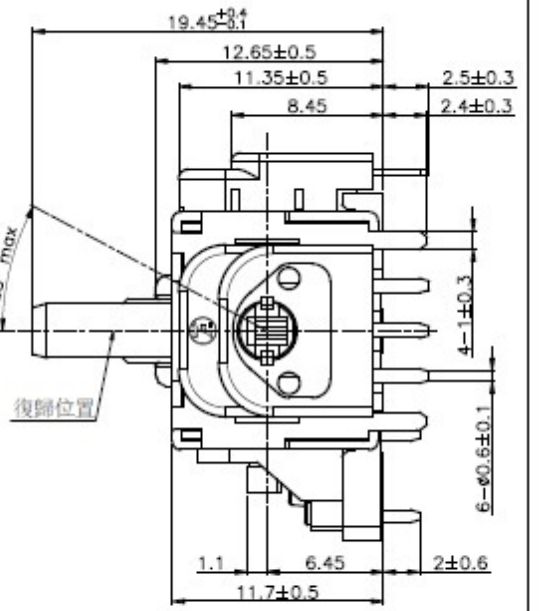

PCB板孔尺寸圖(2:1)
未注尺寸公差±0.1

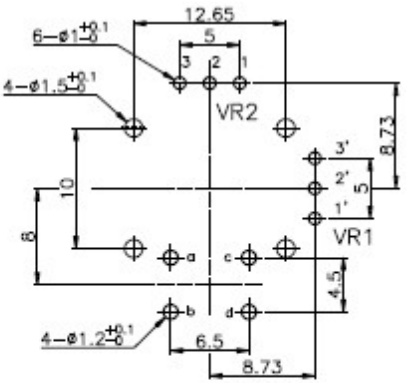

搖柄頭部尺寸(4:1)

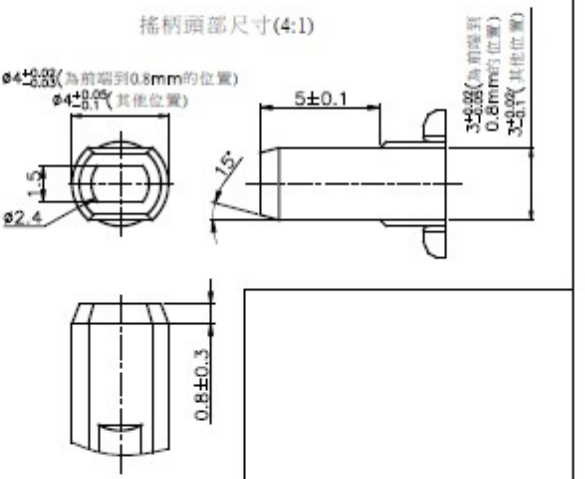

Pin Descriptions

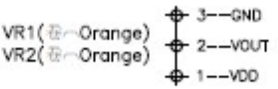

Output voltage variation characteristic diagram

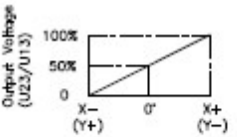

開關回路圖
(Cricuit diagram)

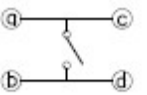

未指定容許±尺寸之公差	
10以下	±0.3
10~100	±0.5
100以上	±0.8
角　度	±5°

MTL	SPEC	DISPOSAL

REVISION	DATE	DESIGN	DRAWN	DESIGN	CHECK	APPROVAL
			吳權穩 2024.04.19	吳權穩		

UNIT MM | SCALE 3/1

TITLE: FJH10K Series

DWG NAME: FJH10K−S2

DWG NO.: 34302010101004